Flux Quantization in F-theory and Freed-Witten anomaly

Raffaele Savelli

MPI - Munich

String-Pheno, Cambridge,
June 2012

Based on work with A. Collinucci,
arXiv: 1011.6388 , 1203.4542

Ideas and Purposes

Ideas and Purposes

- Global aspects of F-theory configurations are of crucial importance both phenomenologically and formally

Ideas and Purposes

- Global aspects of F-theory configurations are of crucial importance both phenomenologically and formally

  For instance, a crucial issue like quantization of fluxes is intimately related to vanishing of Freed-Witten anomalies

Ideas and Purposes

- Global aspects of F-theory configurations are of crucial importance both phenomenologically and formally

  For instance, a crucial issue like quantization of fluxes is intimately related to vanishing of Freed-Witten anomalies

  A detailed understanding of fluxes is relevant for problems like moduli stabilization and generation of chiral matter.

Ideas and Purposes

- Global aspects of F-theory configurations are of crucial importance both phenomenologically and formally

  For instance, a crucial issue like quantization of fluxes is intimately related to vanishing of Freed-Witten anomalies

  A detailed understanding of fluxes is relevant for problems like moduli stabilization and generation of chiral matter.

- F-theory on $\mathbb{R}^{1,3} \times \mathrm{CY}_4$ "defined as" M-theory on elliptic CY_4 in the limit of vanishing fiber volume

Ideas and Purposes

✦ Global aspects of F-theory configurations are of crucial importance both phenomenologically and formally

For instance, a crucial issue like quantization of fluxes is intimately related to vanishing of Freed-Witten anomalies

A detailed understanding of fluxes is relevant for problems like moduli stabilization and generation of chiral matter.

✦ F-theory on $\mathbb{R}^{1,3} \times \mathrm{CY}_4$ "defined as" M-theory on elliptic CY_4 in the limit of vanishing fiber volume

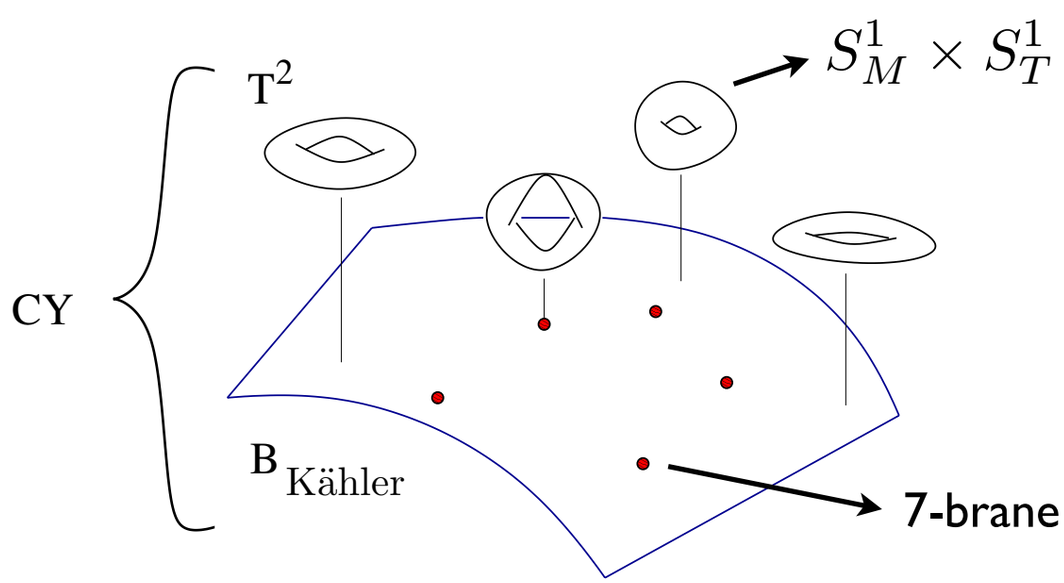

Ideas and Purposes

✦ Global aspects of F-theory configurations are of crucial importance both phenomenologically and formally

For instance, a crucial issue like quantization of fluxes is intimately related to vanishing of Freed-Witten anomalies

A detailed understanding of fluxes is relevant for problems like moduli stabilization and generation of chiral matter.

✦ F-theory on $\mathbb{R}^{1,3} \times \mathrm{CY}_4$ "defined as" M-theory on elliptic CY_4 in the limit of vanishing fiber volume

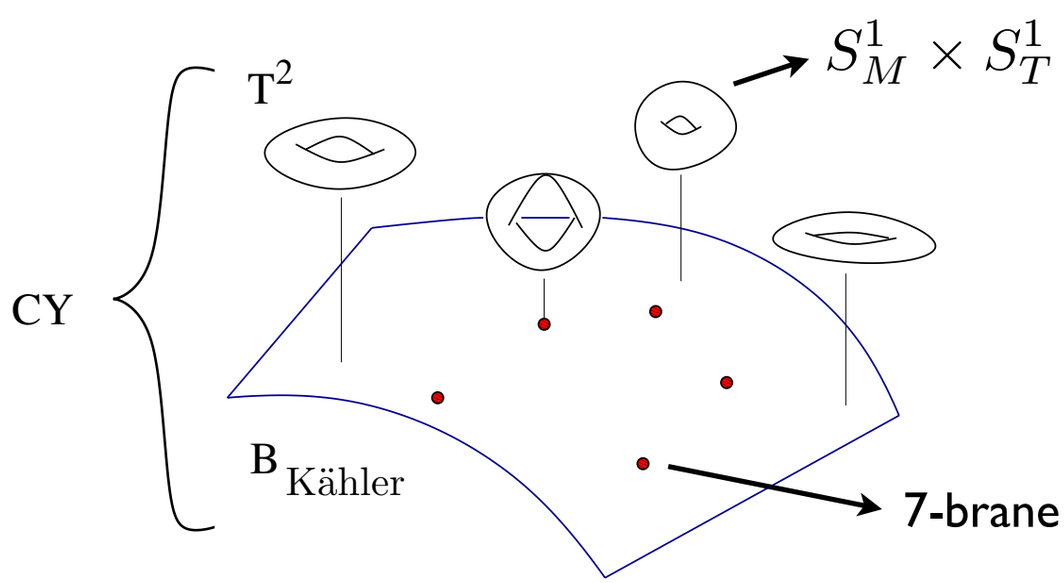

	M/F	IIB
Fluxes:	G_4 →	7-brane flux
		bulk fluxes

Ideas and Purposes

✦ Global aspects of F-theory configurations are of crucial importance both phenomenologically and formally

For instance, a crucial issue like quantization of fluxes is intimately related to vanishing of Freed-Witten anomalies

A detailed understanding of fluxes is relevant for problems like moduli stabilization and generation of chiral matter.

✦ F-theory on $\mathbb{R}^{1,3} \times \mathrm{CY}_4$ "defined as" M-theory on elliptic CY_4 in the limit of vanishing fiber volume

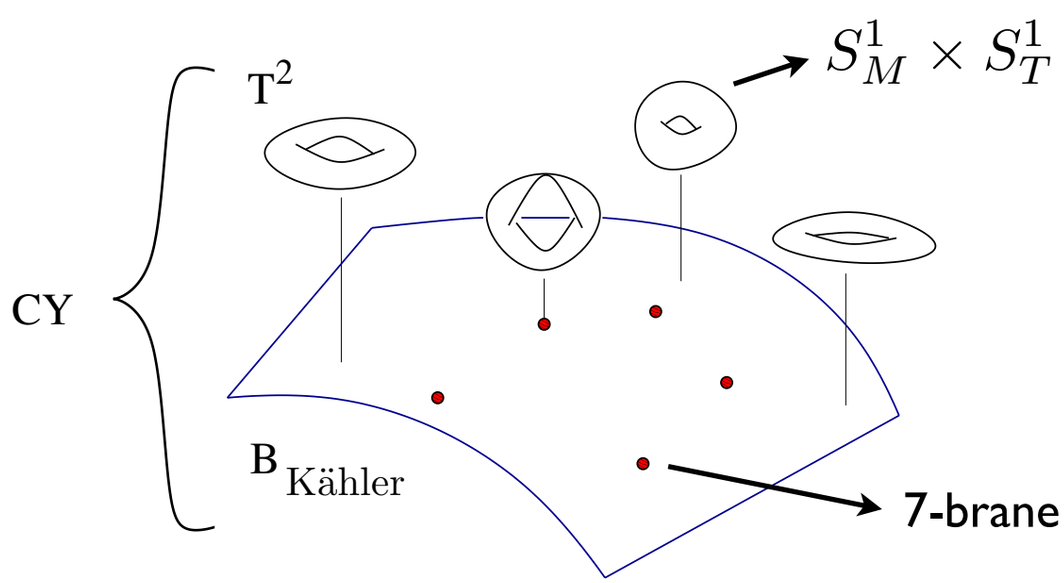

M/F **IIB**

Fluxes: G_4 → 7-brane flux, bulk fluxes

4D Lorentz invariance ➡ G_4 must have one and only one leg along T^2

- We want to study the aspect of quantization of fluxes

✦ We want to study the aspect of quantization of fluxes

The theory of M2 propagating in CY_4 may suffer from a global anomaly E. Witten `96

➡ <u>shift</u> in the quantization of G_4 $$[G_4] + \frac{c_2(\mathrm{CY}_4)}{2} \in H^4(\mathrm{CY}_4, \mathbb{Z})$$

✦ We want to study the aspect of quantization of fluxes

The theory of M2 propagating in CY_4 may suffer from a global anomaly E. Witten `96

➡ <u>shift</u> in the quantization of G_4 $$[G_4] + \frac{c_2(\mathrm{CY}_4)}{2} \in H^4(\mathrm{CY}_4, \mathbb{Z})$$

- Issue for smooth CY: $c_2(\mathrm{CY}_4)$ has either two or no legs along the fiber!

➡ ~~4D Lorentz~~ in CY-compactifications with odd c_2 !

✦ We want to study the aspect of quantization of fluxes

The theory of M2 propagating in CY_4 may suffer from a global anomaly E.Witten `96

➡ <u>shift</u> in the quantization of G_4 $[G_4] + \frac{c_2(\mathrm{CY}_4)}{2} \in H^4(\mathrm{CY}_4, \mathbb{Z})$

- Issue for smooth CY: $c_2(\mathrm{CY}_4)$ has either two or no legs along the fiber!

➡ ~~4D Lorentz~~ in CY-compactifications with odd c_2 !

Luckily: c_2 is always an <u>even</u> class for smooth elliptic CY_4 A.Collinucci, R.S. `10

✦ We want to study the aspect of quantization of fluxes

The theory of M2 propagating in CY_4 may suffer from a global anomaly E.Witten `96

➡ <u>shift</u> in the quantization of G_4 $[G_4] + \frac{c_2(\mathrm{CY}_4)}{2} \in H^4(\mathrm{CY}_4, \mathbb{Z})$

- Issue for smooth CY: $c_2(\mathrm{CY}_4)$ has either two or no legs along the fiber!

➡ ~~4D Lorentz~~ in CY-compactifications with odd c_2 !

Luckily: c_2 is always an <u>even</u> class for smooth elliptic CY_4 A.Collinucci, R.S. `10

- CY singularities: Half-quantization arises when the singular locus is <u>non-spin</u> (SU & Sp) A.Collinucci, R.S. `12

✦ We want to study the aspect of quantization of fluxes

The theory of M2 propagating in CY_4 may suffer from a global anomaly E.Witten `96

➡ <u>shift</u> in the quantization of G_4 $[G_4] + \frac{c_2(\mathrm{CY}_4)}{2} \in H^4(\mathrm{CY}_4, \mathbb{Z})$

- Issue for smooth CY: $c_2(\mathrm{CY}_4)$ has either two or no legs along the fiber!

➡ ~~4D Lorentz~~ in CY-compactifications with odd c_2 !

Luckily: c_2 is always an <u>even</u> class for smooth elliptic CY_4 A.Collinucci, R.S. `10

- CY singularities: Half-quantization arises when the singular locus is <u>non-spin</u> (SU & Sp) A.Collinucci, R.S. `12

Connection to the Freed-Witten anomaly of the corresponding D7-stack S

$$[F] - \frac{c_1(S)}{2} \in H^2(S, \mathbb{Z})$$

with F the gauge flux along each Cartan

✦ We want to study the aspect of quantization of fluxes

The theory of M2 propagating in CY_4 may suffer from a global anomaly E.Witten `96

➡ <u>shift</u> in the quantization of G_4 $[G_4] + \frac{c_2(\mathrm{CY}_4)}{2} \in H^4(\mathrm{CY}_4, \mathbb{Z})$

- Issue for smooth CY: $c_2(\mathrm{CY}_4)$ has either two or no legs along the fiber!

➡ ~~4D Lorentz~~ in CY-compactifications with odd c_2 !

Luckily: c_2 is always an <u>even</u> class for smooth elliptic CY_4 A.Collinucci, R.S. `10

- CY singularities: Half-quantization arises when the singular locus is <u>non-spin</u> (SU & Sp) A.Collinucci, R.S. `12

Connection to the Freed-Witten anomaly of the corresponding D7-stack S

$$[F] - \frac{c_1(S)}{2} \in H^2(S, \mathbb{Z})$$ with F the gauge flux along each Cartan

✦ We want to find a direct and explicit map: $C^{(2)} \in H_2(S, \mathbb{Z})$

detecting FW anomaly

✦ We want to study the aspect of quantization of fluxes

The theory of M2 propagating in CY_4 may suffer from a global anomaly E.Witten `96

➡ <u>shift</u> in the quantization of G_4 $[G_4] + \frac{c_2(\mathrm{CY}_4)}{2} \in H^4(\mathrm{CY}_4, \mathbb{Z})$

- Issue for smooth CY: $c_2(\mathrm{CY}_4)$ has either two or no legs along the fiber!

➡ ~~4D Lorentz~~ in CY-compactifications with odd c_2 !

Luckily: c_2 is always an <u>even</u> class for smooth elliptic CY_4 A.Collinucci, R.S. `10

- CY singularities: Half-quantization arises when the singular locus is <u>non-spin</u> (SU & Sp) A.Collinucci, R.S. `12

Connection to the Freed-Witten anomaly of the corresponding D7-stack S

$$[F] - \frac{c_1(S)}{2} \in H^2(S, \mathbb{Z})$$ with F the gauge flux along each Cartan

✦ We want to find a direct and explicit map:

$$C^{(2)} \in H_2(S, \mathbb{Z}) \xrightarrow{\text{Lift}} C^{(4)} \in H_4(\mathrm{CY}_4, \mathbb{Z})$$

detecting FW anomaly → detecting M2 anomaly

The SU(2N) case

The SU(2N) case

Resolved fiber over SU(4) locus $\longleftrightarrow$ Affine Dynkin diagram of SU(4)

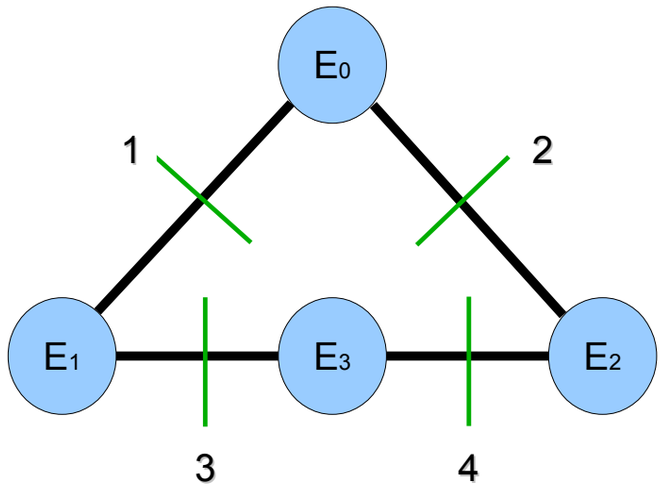

The SU(2N) case

Resolved fiber over SU(4) locus $\longleftrightarrow$ Affine Dynkin diagram of SU(4)

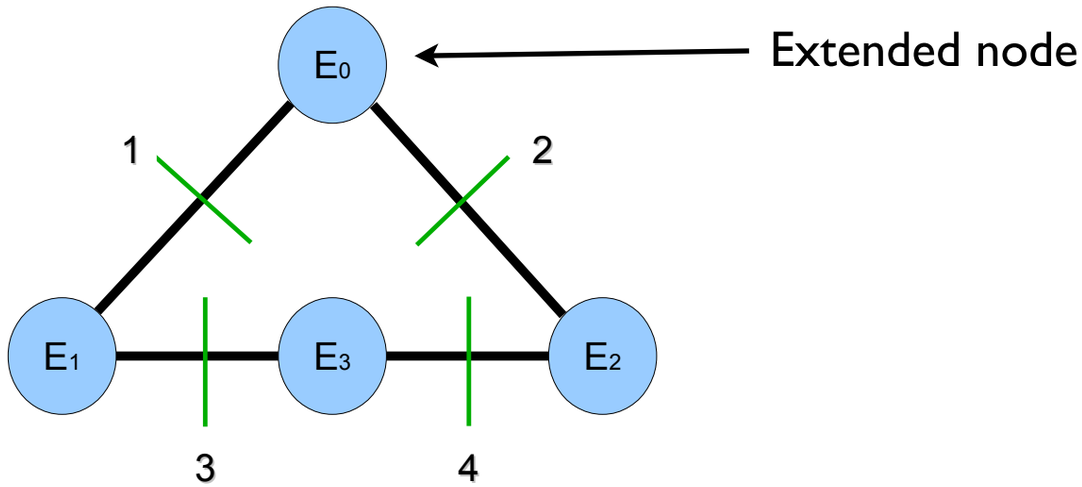

The SU(2N) case

Resolved fiber over SU(4) locus ⟷ Affine Dynkin diagram of SU(4)

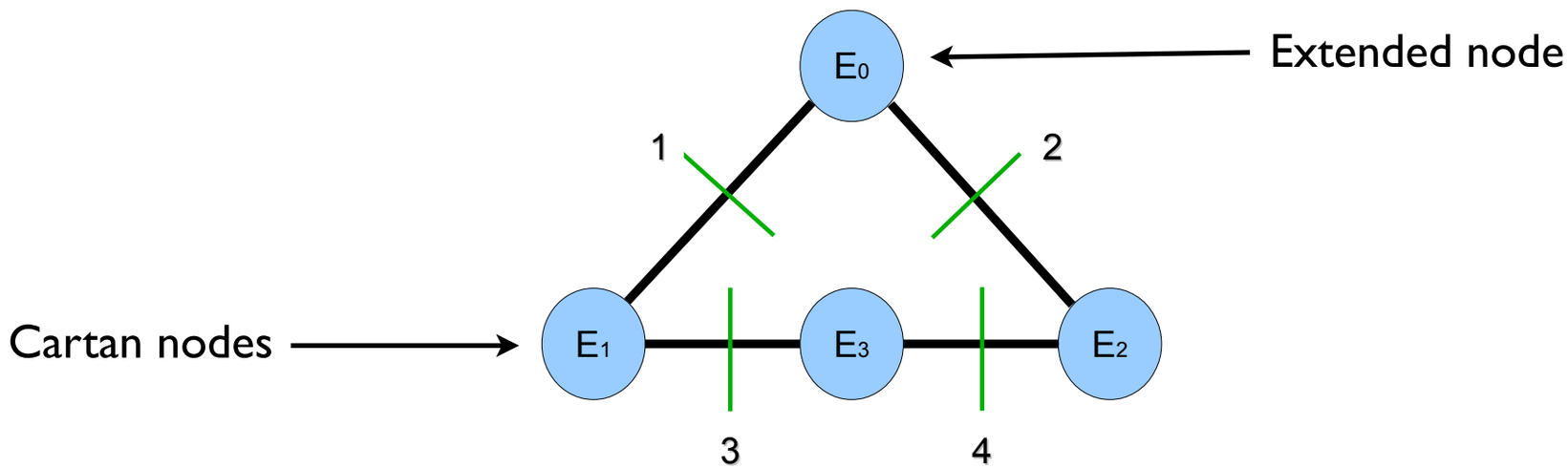

The SU(2N) case

Resolved fiber over SU(4) locus ⟷ Affine Dynkin diagram of SU(4)

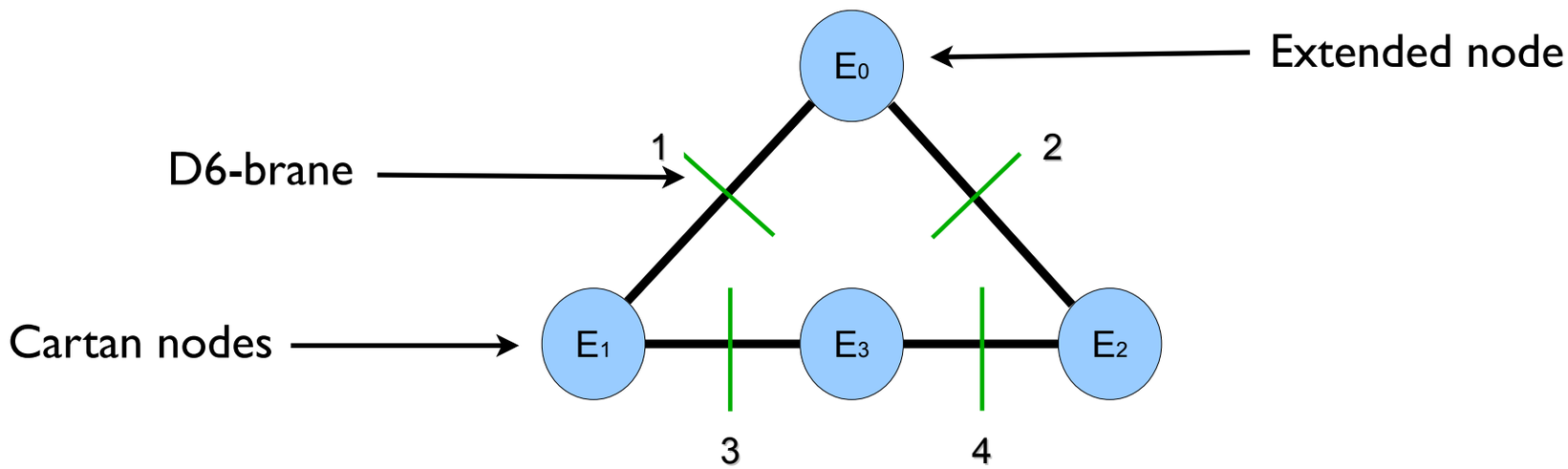

The SU(2N) case

Resolved fiber over SU(4) locus ⟷ Affine Dynkin diagram of SU(4)

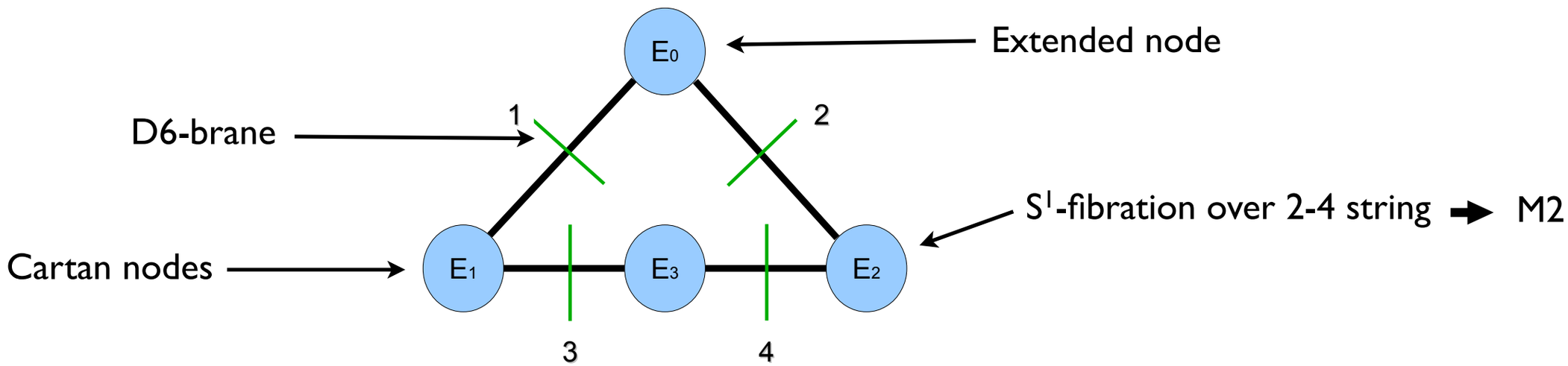

The SU(2N) case

Resolved fiber over SU(4) locus ⟷ Affine Dynkin diagram of SU(4)

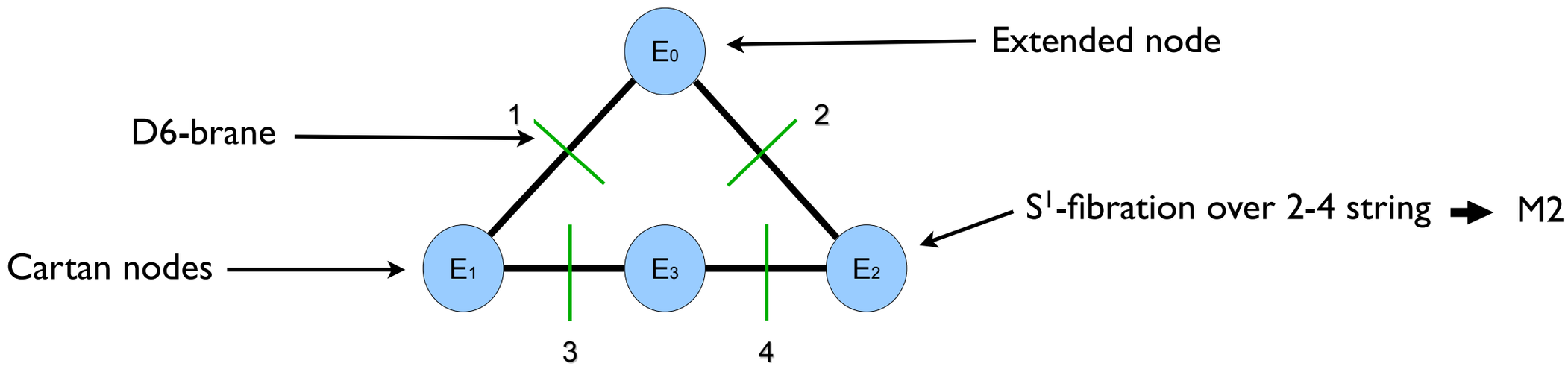

Loops of i-j IIA open strings

The SU(2N) case

Resolved fiber over SU(4) locus ⟷ Affine Dynkin diagram of SU(4)

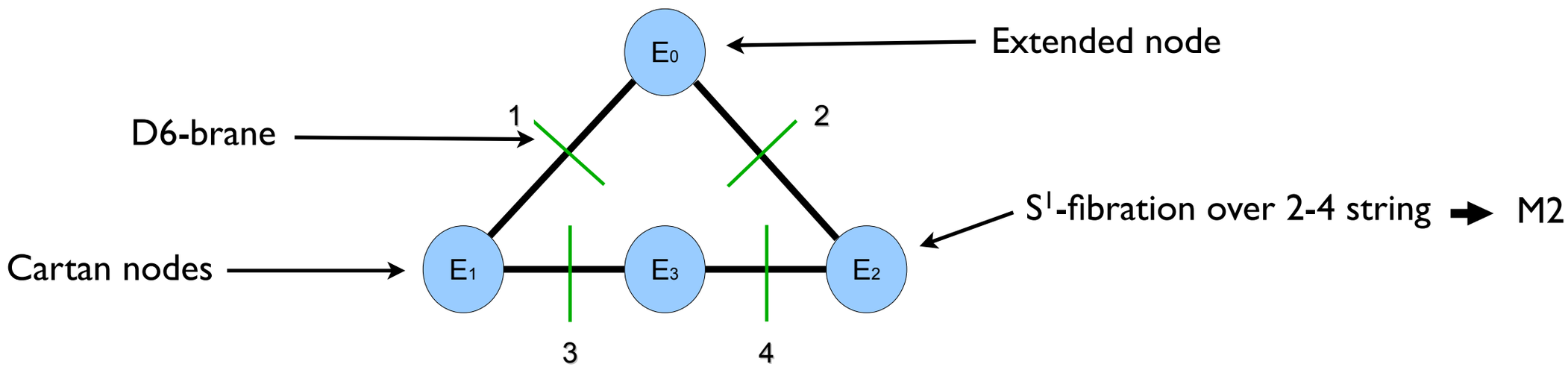

Loops of boundaries on D6i and D6j ➡ $C^{(2)}$

Loops of i-j IIA open strings

The SU(2N) case

Resolved fiber over SU(4) locus ⟷ Affine Dynkin diagram of SU(4)

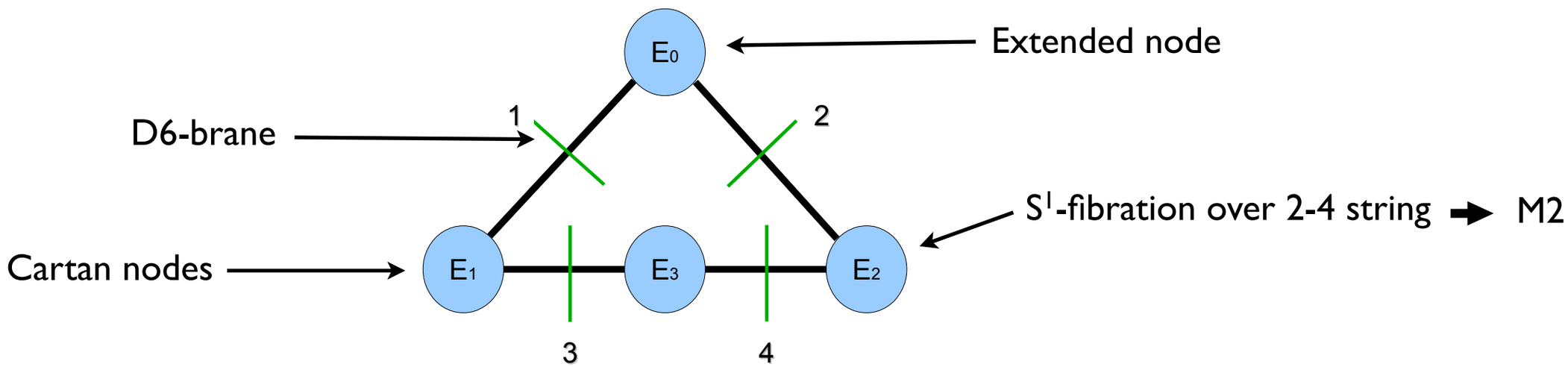

Loops of i-j IIA open strings → Loops of boundaries on D6i and D6j → $C^{(2)}$

Loops of i-j IIA open strings → Loops of M2s = En fibered over $C^{(2)}$ → $C^{(4)}$

The SU(2N) case

Resolved fiber over SU(4) locus ⟷ Affine Dynkin diagram of SU(4)

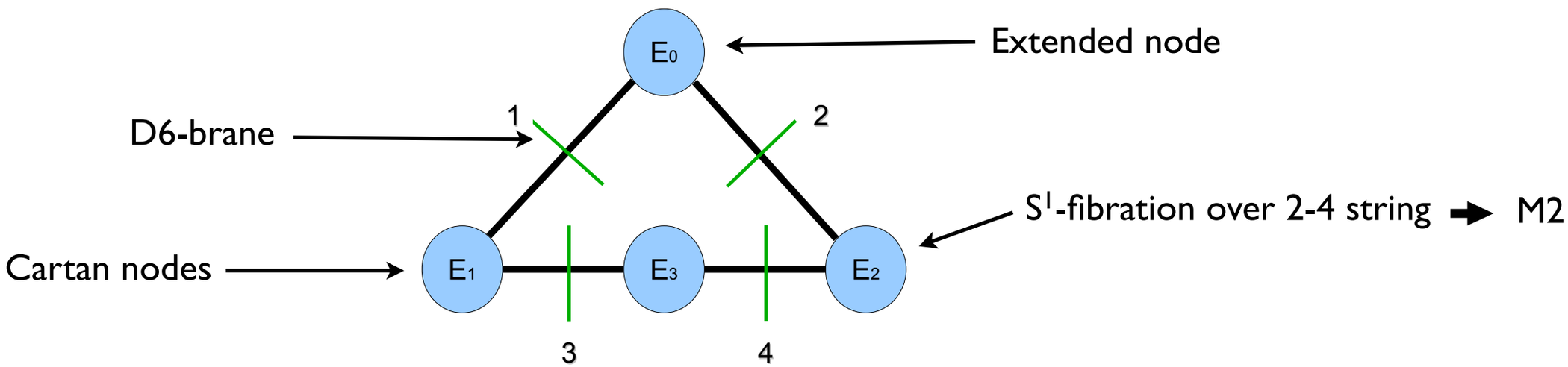

Loops of i-j IIA open strings → Loops of boundaries on D6i and D6j → $C^{(2)}$

↓ lift

Loops of M2s = En fibered over $C^{(2)}$ → $C^{(4)}$

The SU(2N) case

Resolved fiber over SU(4) locus ⟷ Affine Dynkin diagram of SU(4)

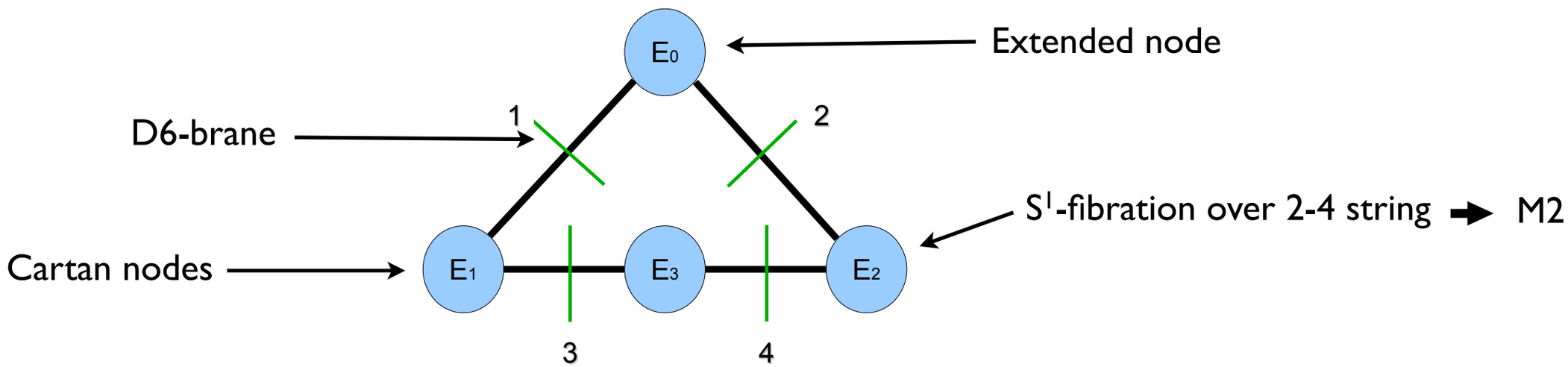

Loops of i-j IIA open strings → Loops of boundaries on D6i and D6j → $C^{(2)}$

↓ lift

Loops of M2s = En fibered over $C^{(2)}$ → $C^{(4)}$

However, these 4-cycles are NOT able to detect the M2 anomaly!

The SU(2N) case

Resolved fiber over SU(4) locus $\longleftrightarrow$ Affine Dynkin diagram of SU(4)

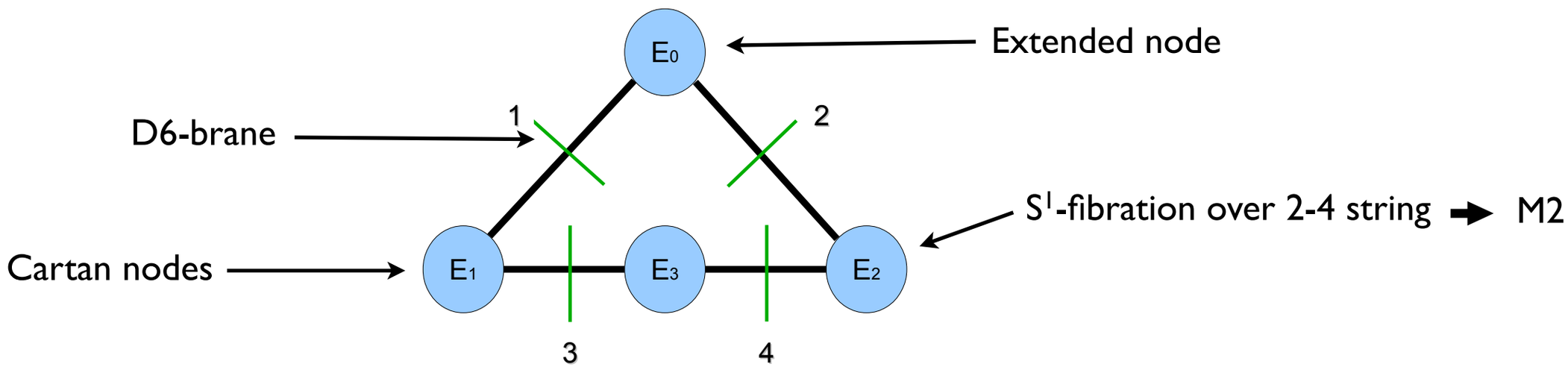

Loops of i-j IIA open strings

- Loops of boundaries on D6i and D6j $\rightarrow$ $C^{(2)}$
- $\downarrow$ lift
- Loops of M2s = En fibered over $C^{(2)}$ $\rightarrow$ $C^{(4)}$

However, these 4-cycles are NOT able to detect the M2 anomaly!

e.g. $E_3 \longrightarrow C^{(4)} \downarrow C^{(2)}$ $\Rightarrow$ $\displaystyle\int_{C^{(4)}} \frac{c_2}{2} \sim \int_{C^{(2)}\subset \mathrm{D6}_3} F|_3 - \int_{C^{(2)}\subset \mathrm{D6}_4} F|_4$ integer

gauge flux

The SU(2N) case

Resolved fiber over SU(4) locus $\longleftrightarrow$ Affine Dynkin diagram of SU(4)

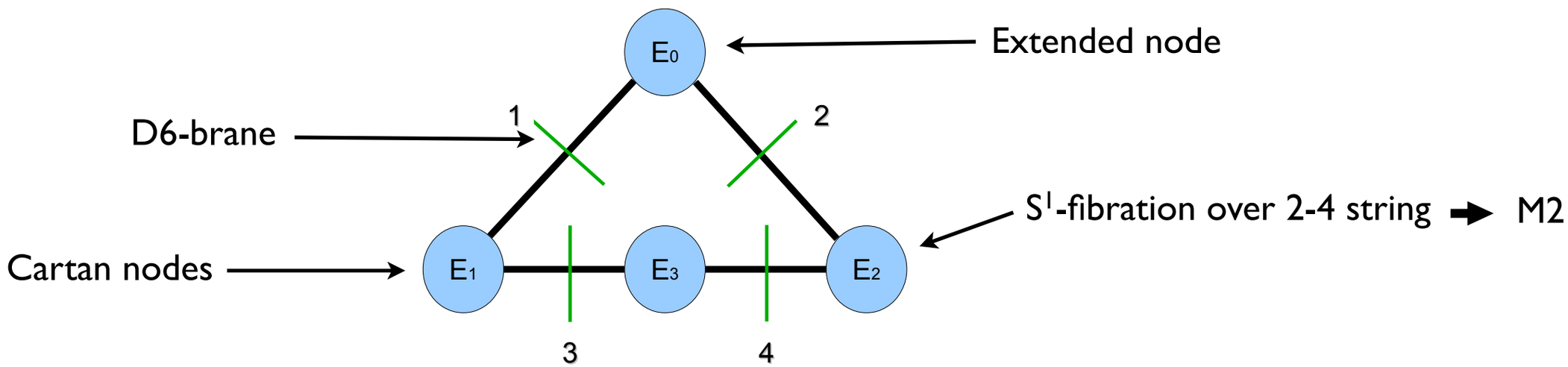

Loops of i-j IIA open strings

- Loops of boundaries on D6i and D6j $\rightarrow$ $C^{(2)}$
- $\downarrow$ lift
- Loops of M2s = En fibered over $C^{(2)}$ $\rightarrow$ $C^{(4)}$

However, these 4-cycles are NOT able to detect the M2 anomaly!

e.g. $E_3 \longrightarrow C^{(4)} \downarrow C^{(2)}$ $\Rightarrow$ $\displaystyle\int_{C^{(4)}} \frac{c_2}{2} \sim \int_{C^{(2)}\subset \mathrm{D6}_3} F|_3 - \int_{C^{(2)}\subset \mathrm{D6}_4} F|_4$ integer

gauge flux

$C^{(4)}$ complete-intersection $\Rightarrow$ $\displaystyle\int_{C^{(4)}} c_2$ is even

S.Krause, C.Mayrhofer, T.Weigand `12

Strategy:

Strategy: Use a node interpolating between a brane of the stack and a <u>fluxless</u> brane

Strategy: Use a node interpolating between a brane of the stack and a <u>fluxless</u> brane

Natural candidate: $O(1)$ invariant D7-brane W with "Whitney Umbrella" shape

Strategy: Use a node interpolating between a brane of the stack and a <u>fluxless</u> brane

Natural candidate: O(1) invariant D7-brane W with "Whitney Umbrella" shape

Such nodes pop up along the "fundamental-matter" curve $S \cap W \subset CY_3$

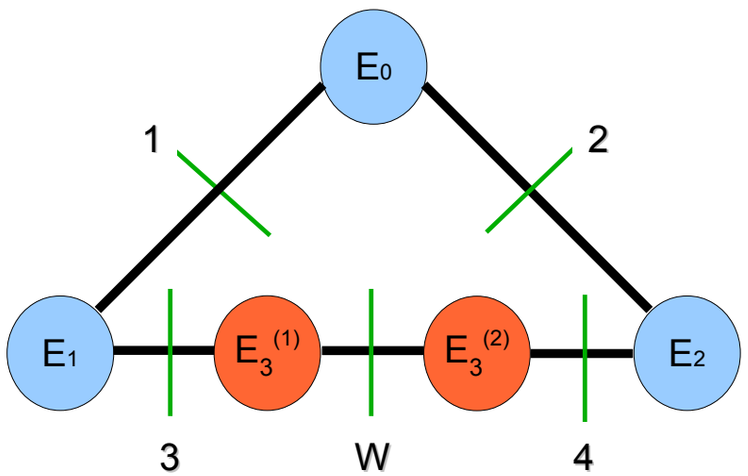

Strategy: Use a node interpolating between a brane of the stack and a <u>fluxless</u> brane

Natural candidate: O(1) invariant D7-brane W with "Whitney Umbrella" shape

Such nodes pop up along the "fundamental-matter" curve $S \cap W \subset CY_3$

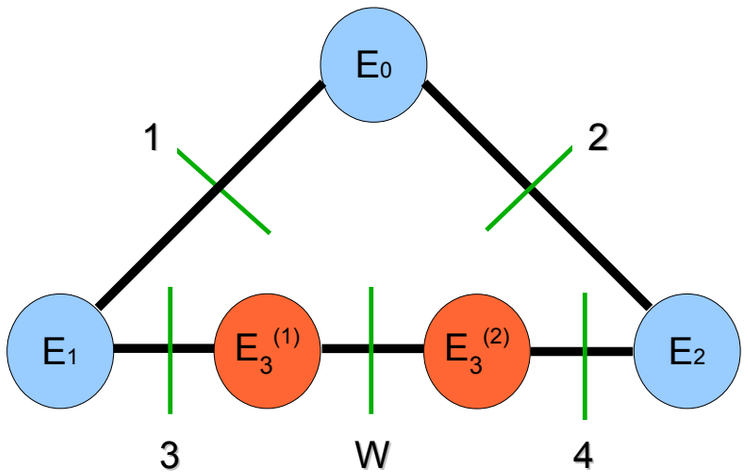

BUT $C^{(2)} \neq S \cap W$ as W is anomaly free !

Strategy: Use a node interpolating between a brane of the stack and a <u>fluxless</u> brane

Natural candidate: O(1) invariant D7-brane W with "Whitney Umbrella" shape

Such nodes pop up along the "fundamental-matter" curve $S \cap W \subset CY_3$

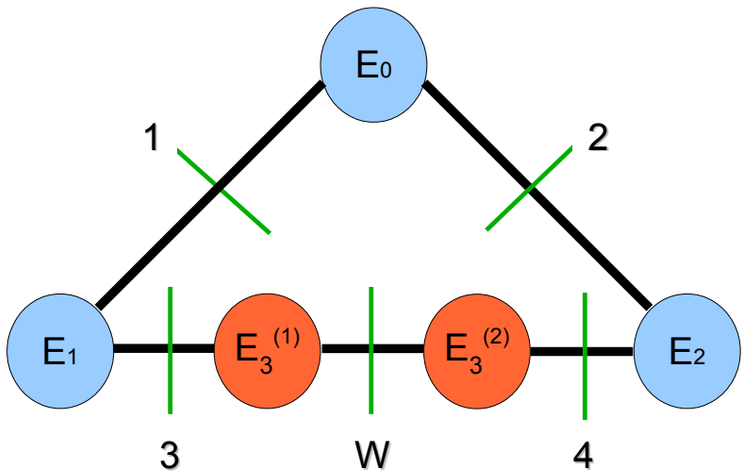

BUT $C^{(2)} \neq S \cap W$ as W is anomaly free !

➡ <u>Constrain</u> CY_4 complex structure such that $S \cap W$ is <u>reducible</u> and choose $C^{(2)}$ to be <u>one</u> component

Strategy: Use a node interpolating between a brane of the stack and a <u>fluxless</u> brane

Natural candidate: O(1) invariant D7-brane W with "Whitney Umbrella" shape

Such nodes pop up along the "fundamental-matter" curve $S \cap W \subset CY_3$

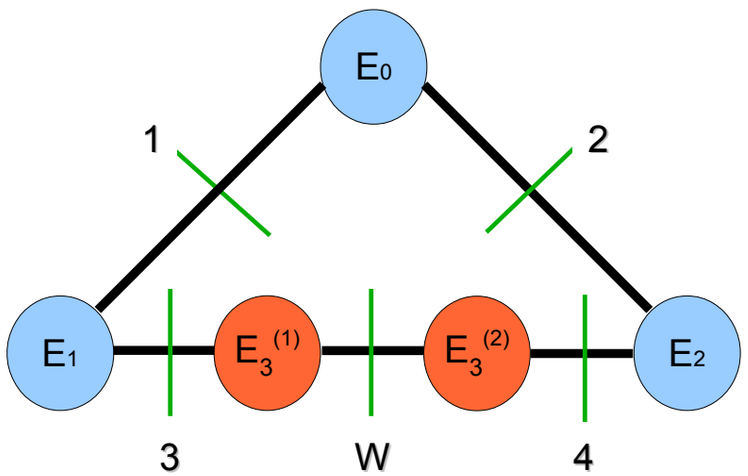

BUT $C^{(2)} \neq S \cap W$ as W is anomaly free !

➡ <u>Constrain</u> CY_4 complex structure such that $S \cap W$ is <u>reducible</u> and choose $C^{(2)}$ to be <u>one</u> component

➡ Some integral 4-classes of CY_4 acquire holomorphic representatives

Mathematically: $H^{2,2}_{\mathrm{H}}(\mathrm{CY}_4) \cap H^4(\mathrm{CY}_4, \mathbb{Z}) \neq 0$ A.Braun, A.Collinucci, R.Valandro `11

Strategy: Use a node interpolating between a brane of the stack and a <u>fluxless</u> brane

Natural candidate: O(1) invariant D7-brane W with "Whitney Umbrella" shape

Such nodes pop up along the "fundamental-matter" curve $S \cap W \subset CY_3$

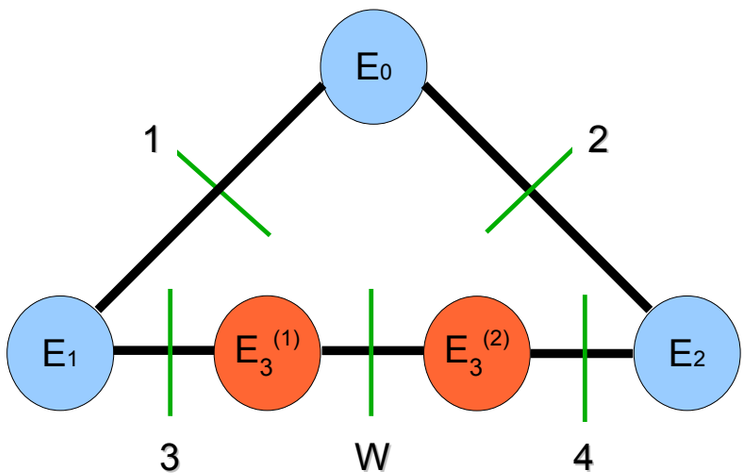

BUT $C^{(2)} \neq S \cap W$ as W is anomaly free !

➡ <u>Constrain</u> CY_4 complex structure such that $S \cap W$ is <u>reducible</u> and choose $C^{(2)}$ to be <u>one</u> component

➡ Some integral 4-classes of CY_4 acquire holomorphic representatives

Mathematically: $H^{2,2}_{\mathrm{H}}(\mathrm{CY}_4) \cap H^4(\mathrm{CY}_4, \mathbb{Z}) \neq 0$ A.Braun, A.Collinucci, R.Valandro `11

They are: $E_3^{(1,2)} \longrightarrow C^{(4)} \downarrow C^{(2)}$

➡ NOT matter surfaces!

➡ $\int_{C^{(4)}} \frac{c_2}{2} \sim \int_{C^{(2)} \subset \mathrm{D6}_3} F|_3$

Strategy: Use a node interpolating between a brane of the stack and a <u>fluxless</u> brane

Natural candidate: O(1) invariant D7-brane W with "Whitney Umbrella" shape

Such nodes pop up along the "fundamental-matter" curve $S \cap W \subset CY_3$

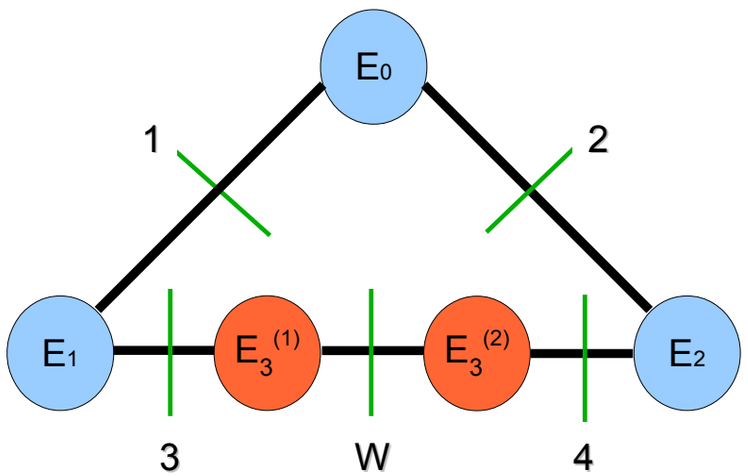

BUT $C^{(2)} \neq S \cap W$ as W is anomaly free !

➡ <u>Constrain</u> CY_4 complex structure such that $S \cap W$ is <u>reducible</u> and choose $C^{(2)}$ to be <u>one</u> component

➡ Some integral 4-classes of CY_4 acquire holomorphic representatives

Mathematically: $H^{2,2}_{\mathrm{H}}(\mathrm{CY}_4) \cap H^4(\mathrm{CY}_4, \mathbb{Z}) \neq 0$ A.Braun, A.Collinucci, R.Valandro `11

They are: $E_3^{(1,2)} \longrightarrow C^{(4)} \downarrow C^{(2)}$

➡ NOT matter surfaces!

➡ $\int_{C^{(4)}} \frac{c_2}{2} \sim \int_{C^{(2)} \subset \mathrm{D6}_3} F|_3$

General result for SU(2N) N≥2

$$\boxed{\int_{C^{(4)}} c_2(\mathrm{CY}_4) = \int_{C^{(2)}} 6c_1(B) - (2N-1)S}$$

Strategy: Use a node interpolating between a brane of the stack and a <u>fluxless</u> brane

Natural candidate: O(1) invariant D7-brane W with "Whitney Umbrella" shape

Such nodes pop up along the "fundamental-matter" curve $S \cap W \subset CY_3$

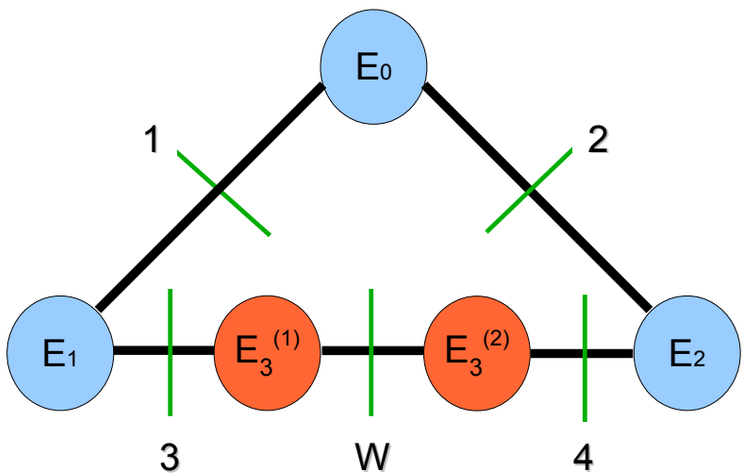

BUT $C^{(2)} \neq S \cap W$ as W is anomaly free !

➡ <u>Constrain</u> CY_4 complex structure such that $S \cap W$ is <u>reducible</u> and choose $C^{(2)}$ to be <u>one</u> component

➡ Some integral 4-classes of CY_4 acquire holomorphic representatives

Mathematically: $H^{2,2}_{\mathrm{H}}(\mathrm{CY}_4) \cap H^4(\mathrm{CY}_4, \mathbb{Z}) \neq 0$ A.Braun, A.Collinucci, R.Valandro `11

They are: $E_3^{(1,2)} \longrightarrow C^{(4)} \downarrow C^{(2)}$ ➡ NOT matter surfaces!

➡ $\int_{C^{(4)}} \frac{c_2}{2} \sim \int_{C^{(2)} \subset \mathrm{D6}_3} F|_3$

General result for SU(2N) N≥2

$$\boxed{\int_{C^{(4)}} c_2(\mathrm{CY}_4) = \int_{C^{(2)}} 6c_1(B) - (2N-1)S}$$

Same procedure applies for the Sp(N) series

The SU(2N+1) case

The SU(2N+1) case

W splits into the 5th brane of the stack and another non-spin surface

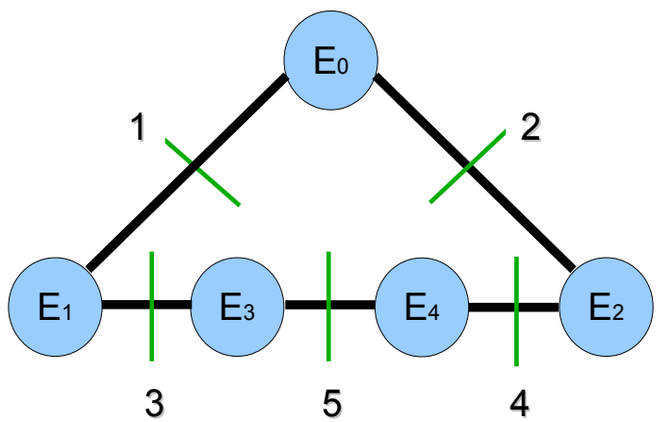

The SU(2N+1) case

W splits into the 5th brane of the stack and another non-spin surface

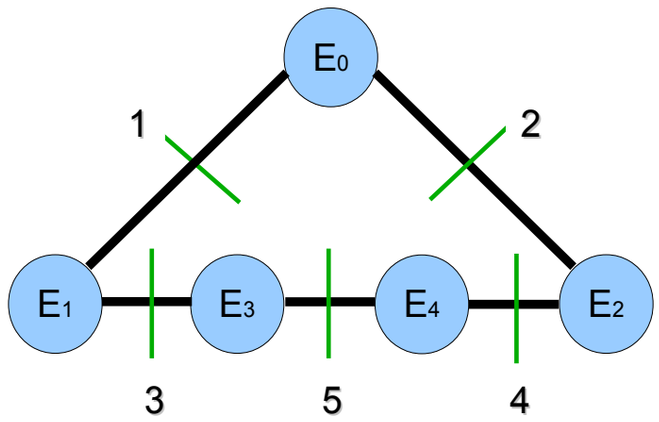

➡ same strategy, but different fluxless object needed!

The SU(2N+1) case

W splits into the 5th brane of the stack and another non-spin surface

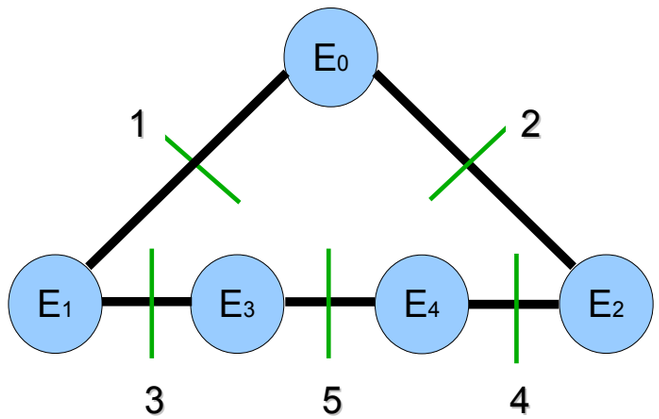

➡ same strategy, but different fluxless object needed!

Orientifold plane

The new nodes pop up along the
"antisymmetric-matter" curve $S \cap O7 \subset CY_3$

The SU(2N+1) case

W splits into the 5th brane of the stack and another non-spin surface

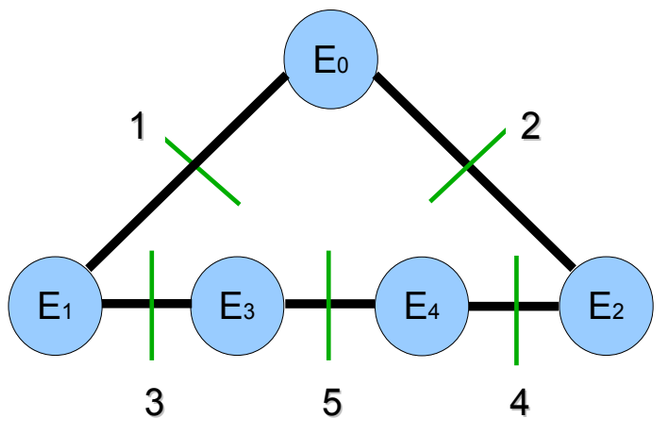

➡ same strategy, but different fluxless object needed!

Orientifold plane

The new nodes pop up along the
"antisymmetric-matter" curve $S \cap O7 \subset CY_3$

Again: Constrain CY_4 complex structure such that $S \cap O7$ is reducible
and choose $C^{(2)}$ to be one component

The SU(2N+1) case

W splits into the 5th brane of the stack and another non-spin surface

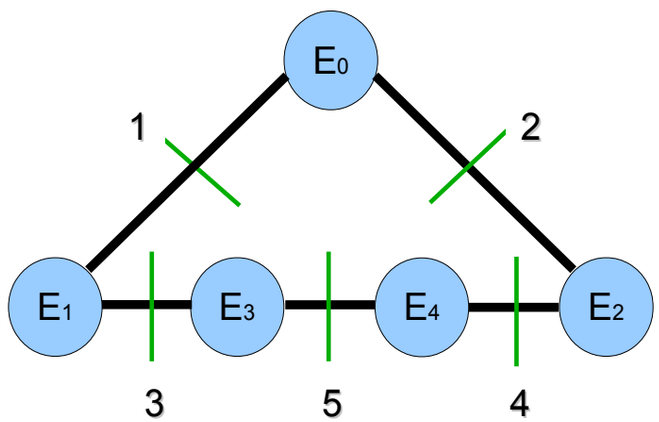

➡ same strategy, but different fluxless object needed!

Orientifold plane

The new nodes pop up along the
"antisymmetric-matter" curve $S \cap O7 \subset CY_3$

Again: Constrain CY_4 complex structure such that $S \cap O7$ is reducible
and choose $C^{(2)}$ to be one component

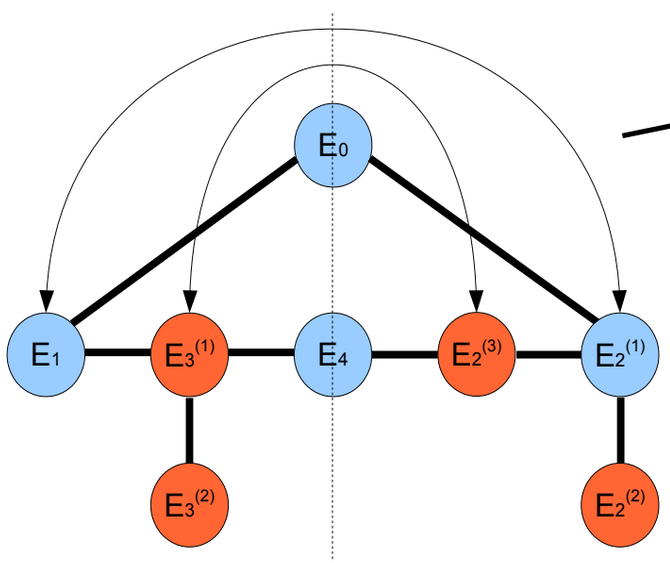

→ Affine Dynkin diagram of SO(10)

The SU(2N+1) case

W splits into the 5th brane of the stack and another non-spin surface

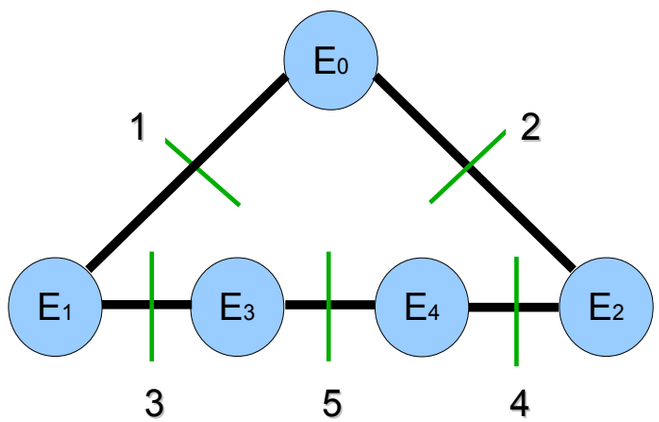

➡ same strategy, but different fluxless object needed!

Orientifold plane

The new nodes pop up along the
"antisymmetric-matter" curve $S \cap O7 \subset CY_3$

Again: Constrain CY_4 complex structure such that $S \cap O7$ is reducible
and choose $C^{(2)}$ to be one component

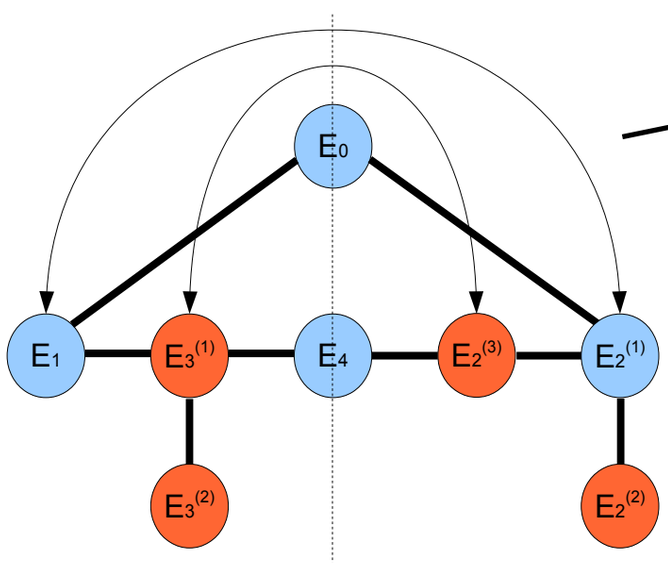

Affine Dynkin diagram of SO(10)

The new integral, holomorphic 4-cycles are
the orange nodes fibered over $C^{(2)}$

The SU(2N+1) case

W splits into the 5th brane of the stack and another non-spin surface

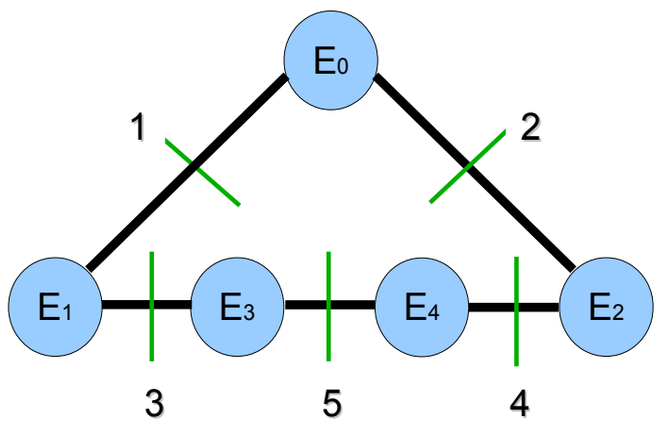

➡ same strategy, but different fluxless object needed!

Orientifold plane

The new nodes pop up along the
"antisymmetric-matter" curve $S \cap O7 \subset CY_3$

Again: Constrain CY_4 complex structure such that $S \cap O7$ is reducible
and choose $C^{(2)}$ to be one component

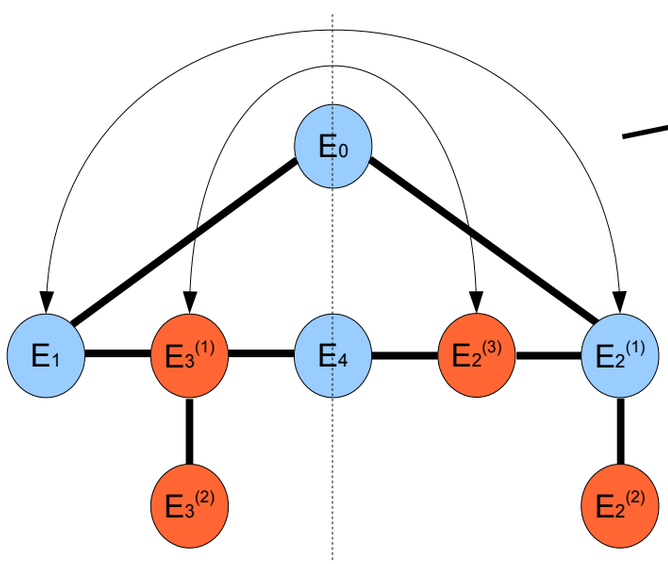

Affine Dynkin diagram of SO(10)

The new integral, holomorphic 4-cycles are
the orange nodes fibered over $C^{(2)}$

Result for SU(2N+1) N≥2

$$\int_{C^{(4)}} c_2(\mathrm{CY}_4) = \int_{C^{(2)}} S$$

The SU(2N+1) case

W splits into the 5th brane of the stack and another non-spin surface

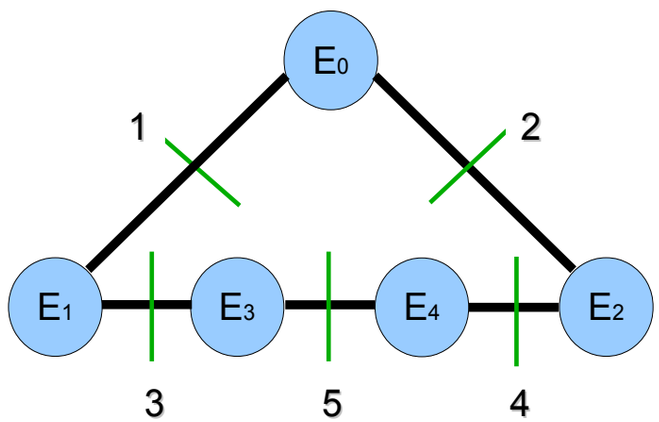

➡ same strategy, but different fluxless object needed!

Orientifold plane

The new nodes pop up along the
"antisymmetric-matter" curve $S \cap O7 \subset CY_3$

Again: Constrain CY_4 complex structure such that $S \cap O7$ is reducible
and choose $C^{(2)}$ to be one component

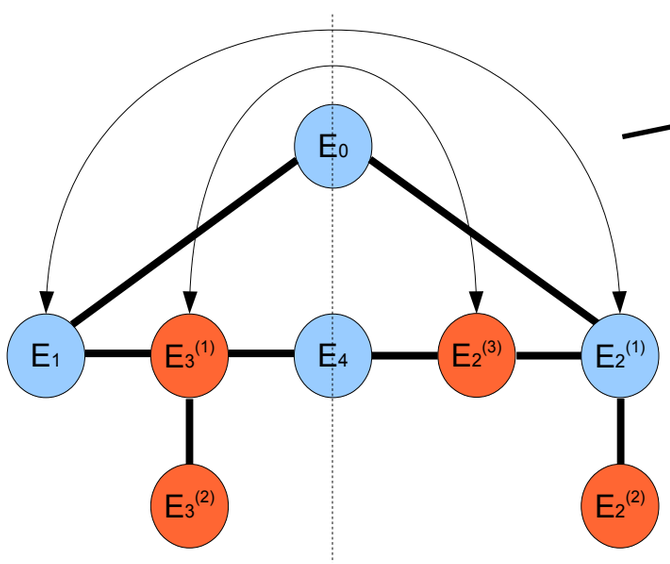

Affine Dynkin diagram of SO(10)

The new integral, holomorphic 4-cycles are
the orange nodes fibered over $C^{(2)}$

Result for SU(2N+1) N≥2

$$\int_{C^{(4)}} c_2(\mathrm{CY}_4) = \int_{C^{(2)}} S$$

Interpretation: $C^{(4)}$ lifts loops of closed, non-orientable strings intersecting S in $C^{(2)}$

The SU(2N+1) case

W splits into the 5th brane of the stack and another non-spin surface

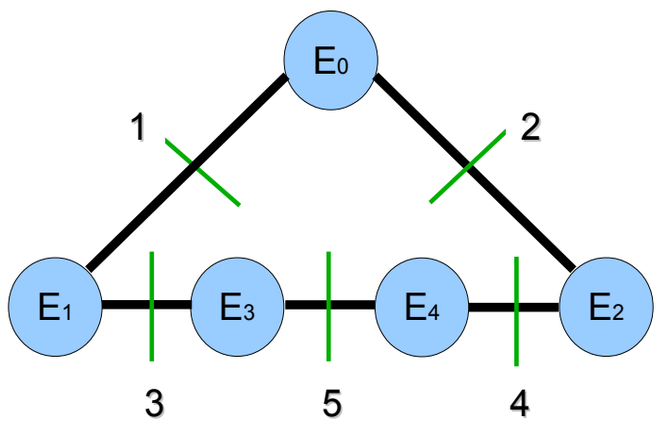

➡ same strategy, but different fluxless object needed!

Orientifold plane

The new nodes pop up along the
"antisymmetric-matter" curve $S \cap O7 \subset CY_3$

Again: Constrain CY_4 complex structure such that $S \cap O7$ is reducible
and choose $C^{(2)}$ to be one component

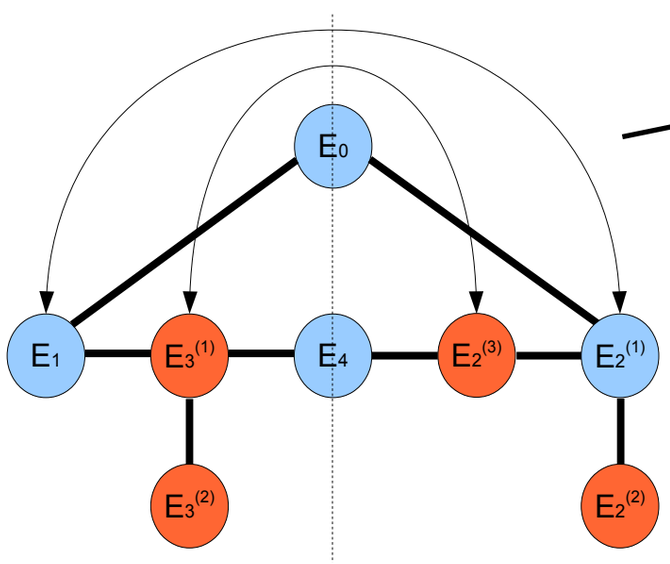

→ Affine Dynkin diagram of SO(10)

The new integral, holomorphic 4-cycles are
the orange nodes fibered over $C^{(2)}$

Result for SU(2N+1) N≥2

$$\int_{C^{(4)}} c_2(\mathrm{CY}_4) = \int_{C^{(2)}} S$$

Interpretation: $C^{(4)}$ lifts loops of closed, non-orientable strings intersecting S in $C^{(2)}$

This procedure works also for the SU(2N) series and lends better itself to treating the "U(1)-restricted" cases.

Outlook

Outlook

- For SU(N), the (non)-spin-ness of $\mathcal{N}_B S$ decides the quantization of G_4

  For Sp(N), $\mathcal{T} S$ matters

  ➡ The cases when B is non-spin need clarification

Outlook

- For SU(N), the (non)-spin-ness of $\mathcal{N}_B S$ decides the quantization of G_4

  For Sp(N), $\mathcal{T} S$ matters

  ➡ The cases when B is non-spin need clarification

- The SU(3) case behaves misteriously...

  maybe due to its "anomalous" enhancement on the O-plane

Outlook

- For SU(N), the (non)-spin-ness of $\mathcal{N}_B S$ decides the quantization of G_4

  For Sp(N), $\mathcal{T} S$ matters

  ➡ The cases when B is non-spin need clarification

- The SU(3) case behaves misteriously...

  maybe due to its "anomalous" enhancement on the O-plane

- The outlined picture of the lift may be useful for several consistency checks

  ➡ Make sure that the M2 anomaly leads to well-defined chiral indices

Outlook

- For SU(N), the (non)-spin-ness of $\mathcal{N}_B S$ decides the quantization of G_4

  For Sp(N), $\mathcal{T} S$ matters

  ➡ The cases when B is non-spin need clarification

- The SU(3) case behaves misteriously...

  maybe due to its "anomalous" enhancement on the O-plane

- The outlined picture of the lift may be useful for several consistency checks

  ➡ Make sure that the M2 anomaly leads to well-defined chiral indices

- Sen's limit of SU(N) F-theory configurations leads to conifold singularities in CY_3

  ➡ An appropriate treatment of them is crucial for topological matters

Outlook

- For SU(N), the (non)-spin-ness of $\mathcal{N}_B S$ decides the quantization of G_4

  For Sp(N), $\mathcal{T} S$ matters

  ➡ The cases when B is non-spin need clarification

- The SU(3) case behaves misteriously...

  maybe due to its "anomalous" enhancement on the O-plane

- The outlined picture of the lift may be useful for several consistency checks

  ➡ Make sure that the M2 anomaly leads to well-defined chiral indices

- Sen's limit of SU(N) F-theory configurations leads to conifold singularities in CY_3

  ➡ An appropriate treatment of them is crucial for topological matters

- The class of $G_4 |_{M5}$ must be pure torsion

  ➡ Analyzing this condition using M/F theory duality may be relevant for the physics of the corresponding type IIB instantons